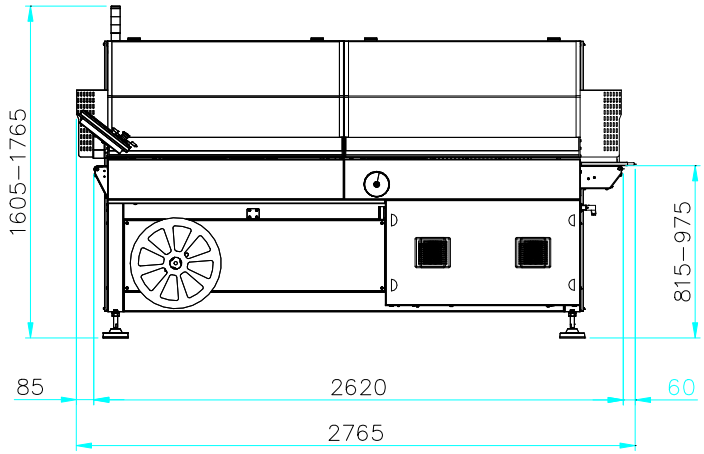

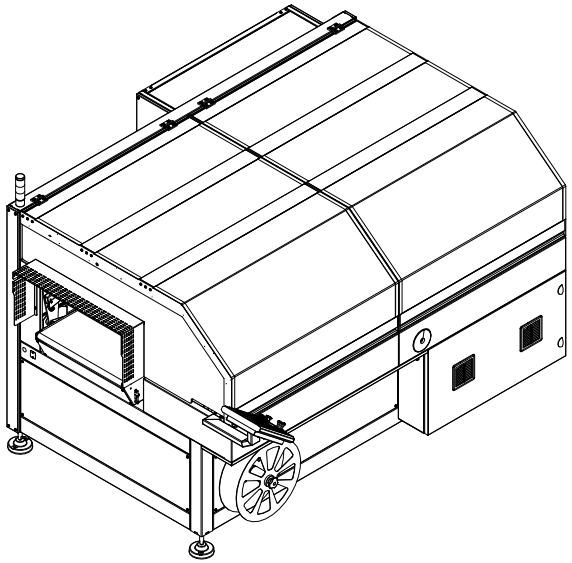

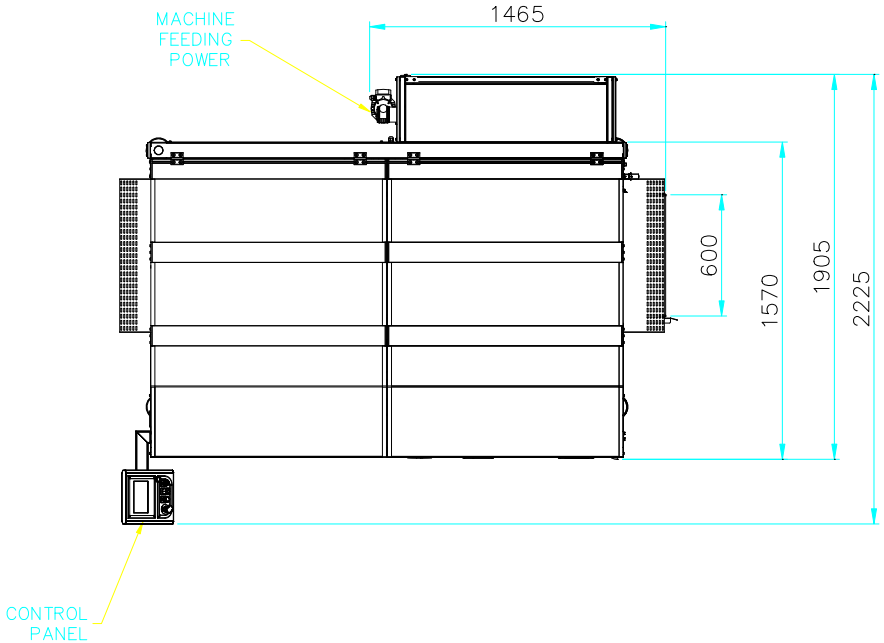

MATIC SEALER 85SC

TECHNICAL SPECIFICATIONS	MACHINE
WEIGHT	
POWER SUPPLY	380–415V 50–60Hz 3PH+N+PE
	220–240V 50–60Hz 3PH+PE
MACHINE INSTALLED POWER:	3950 W

THE WORKABLE FORMAT

H= 50	X=800 mm	Y=600 mm
H= 70 mm	X=730 mm	Y=580 mm
H= 90 mm	X=710 mm	Y=560 mm
H= 110 mm	X=690 mm	Y=540 mm
H= 130 mm	X=670 mm	Y=520 mm
H= 150 mm	X=650 mm	Y=500 mm
H= 170 mm	X=630 mm	Y=480 mm
H= 190 mm	X=610 mm	Y=460 mm
H= 210 mm	X=590 mm	Y=440 mm
H= 230 mm	X=570 mm	Y=420 mm
H= 250 mm	X=550 mm	Y=400 mm

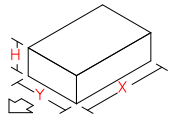

MAX. WEIGHT FORMAT: 30 Kg.

MAX. REEL DIMENSION
Øi= 77 mm
Øe= 350 mm
L = 850 mm

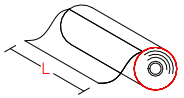

ISG PACK
automatic packaging system

SCALA	DENOMINAZIONE		FORMATO
	LAYOUT MATIC SEALER 85SC		A3
			FOGLIO 1/1
	DISEGNATO	VISTO	DISEGNO
DATA	26/05/2023	26/05/2023	DL013992
FIRMA			RIF.MODIFICA