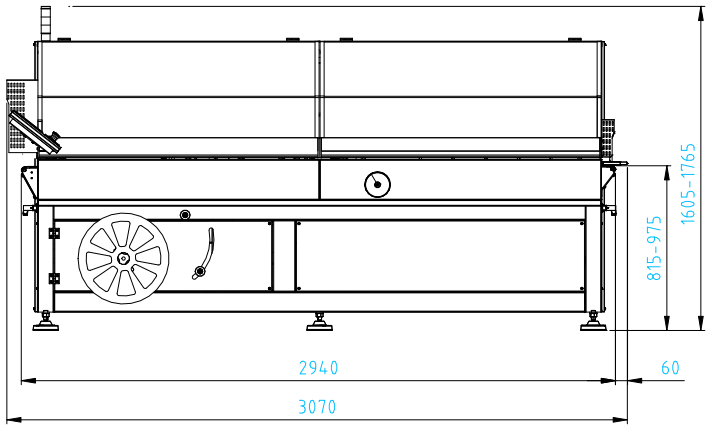

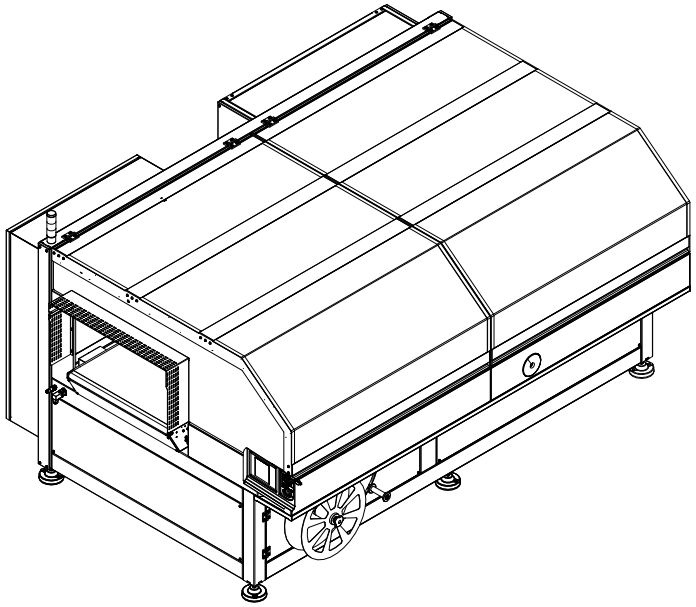

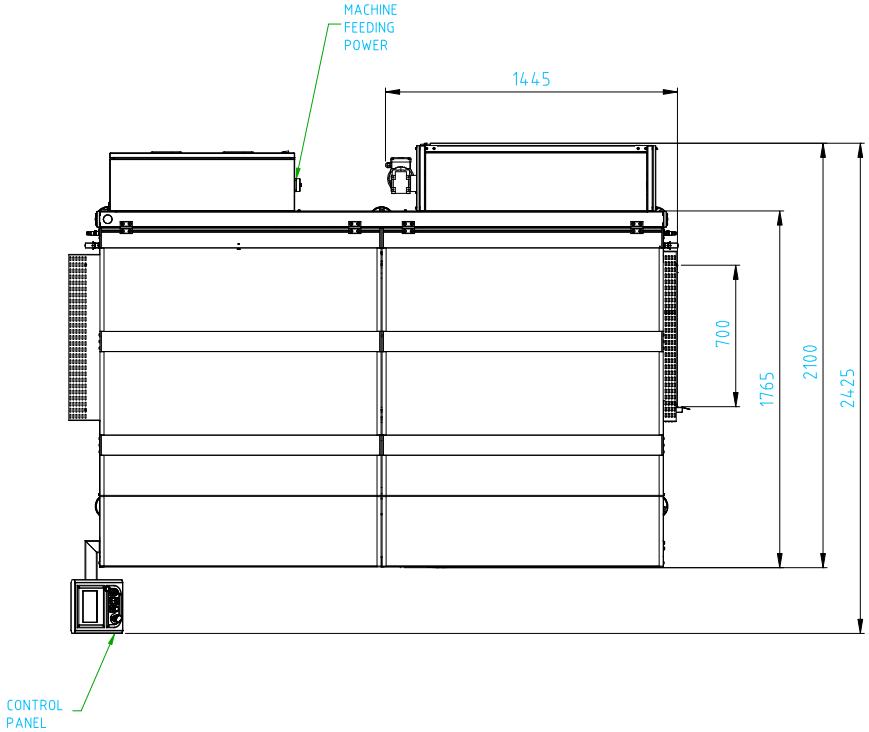

TECHNICAL SPECIFICATIONS

	MACHINE
WEIGHT	
POWER SUPPLY	380–415V 50–60Hz 3PH+N – INSULATED EARTH 220–240V 50–60Hz 3PH – INSULATED EARTH
MACHINE INSTALLED POWER:	3850 W
COMPRESSED AIR INLET:	–
PIPE CONNECTIONS:	–
CONSUMPTION	–
MAX. WEIGHT FORMAT: 30 Kg.	
MAX. REEL DIMENSION Øi= 77 mm Øe= 350 mm L = 950 mm	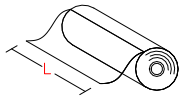

ISG PACK automatic packaging system	SCALA	DENOMINAZIONE LAYOUT ULTRA SEALER 80 HSS	FORMATO A3 FOGLIO 1/1
		DISEGNATO / VISTO	DISEGNO / RIF.MODIFICA
	DATA	26/08/2019 / 06/07/2023	DL012219
	FIRMA		

legge.