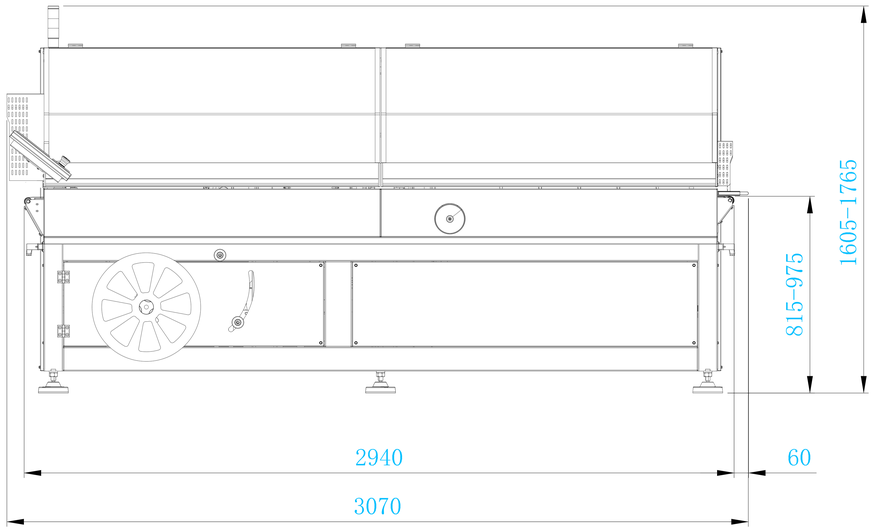

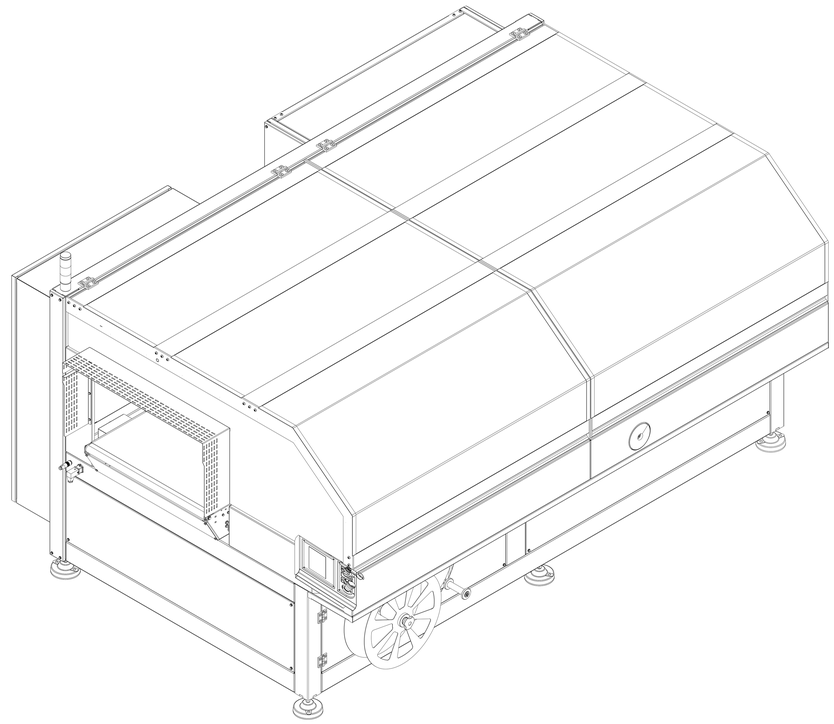

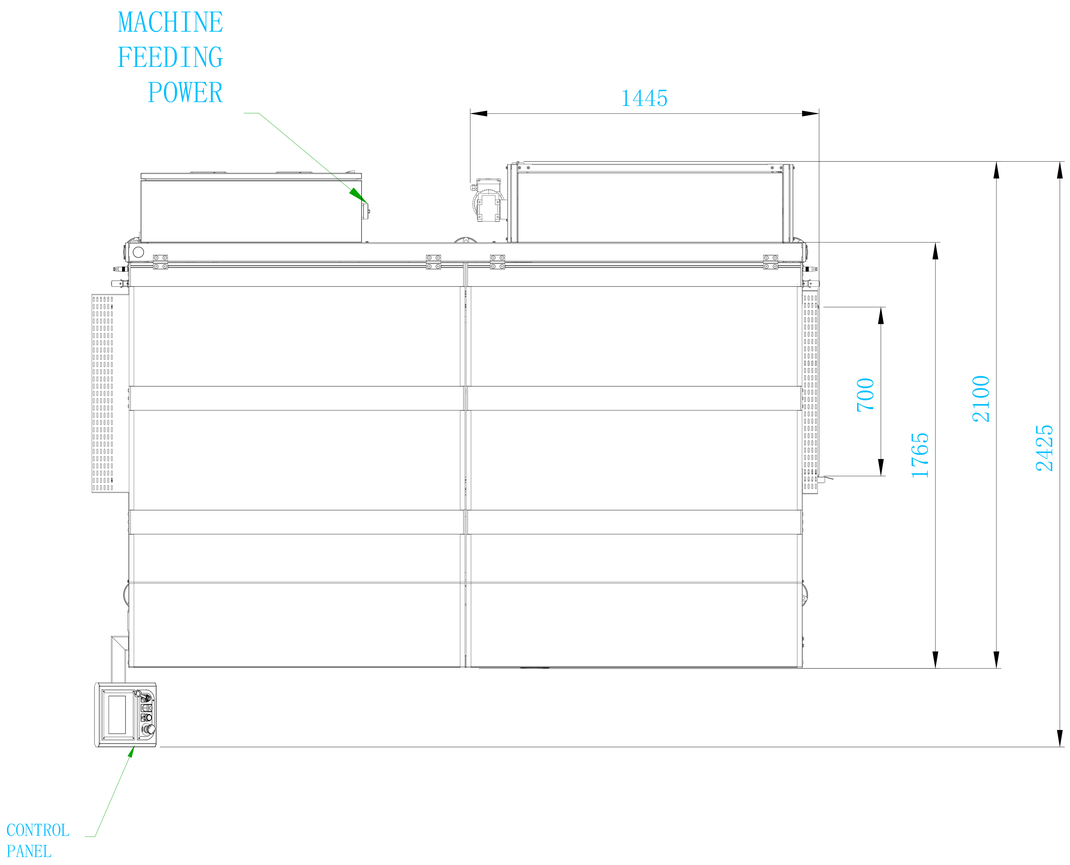

TECHNICAL SPECIFICATIONS

WEIGHT	
POWER SUPPLY	380-415V 50-60Hz 3PH+N+PE 220-240V 50-60Hz 3PH+PE
MACHINE INSTALLED POWER:	11000 W
COMPRESSED AIR INLET:	-
PIPE CONNECTIONS:	-
CONSUMPTION	-
MAX. WEIGHT FORMAT: 30 Kg.	
MAX. REEL DIMENSION Øi= 77 mm Øe= 350 mm L = 950 mm	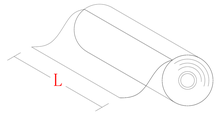

ISG PACK® AUTOMATIC PACKAGING SYSTEM

SCALA	DENOMINAZIONE		FORMATO
	LAYOUT ULTRA SEALER 80SM		A3
			FOGLIO 1/1
	DISEGNATO	VISTO	DISEGNO
DATA	26/08/2019	06/07/2023	DL012216
FIRMA			RIF. MODIFICA